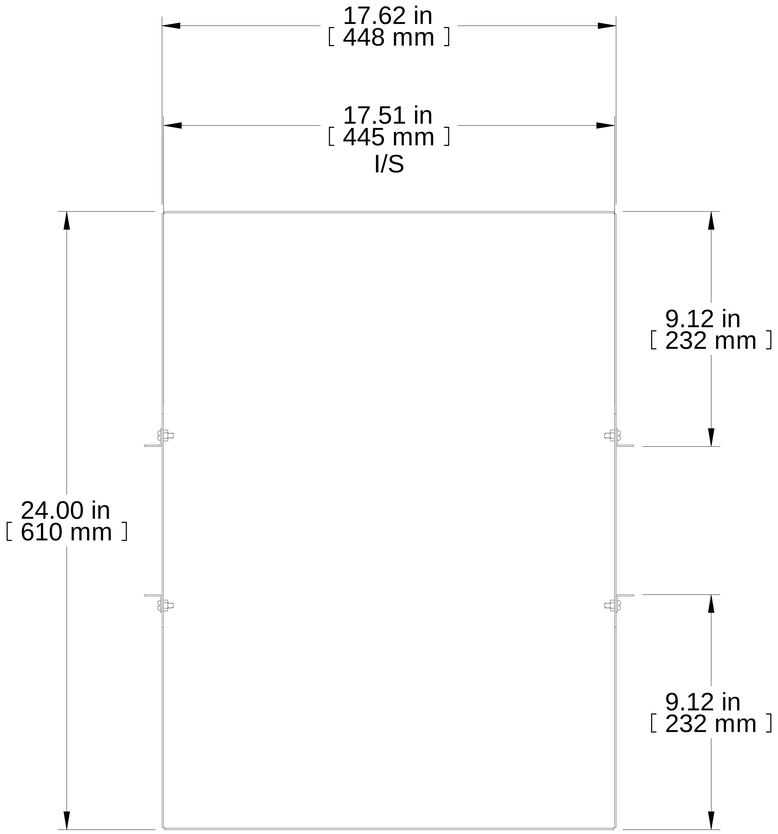


TOP VIEW

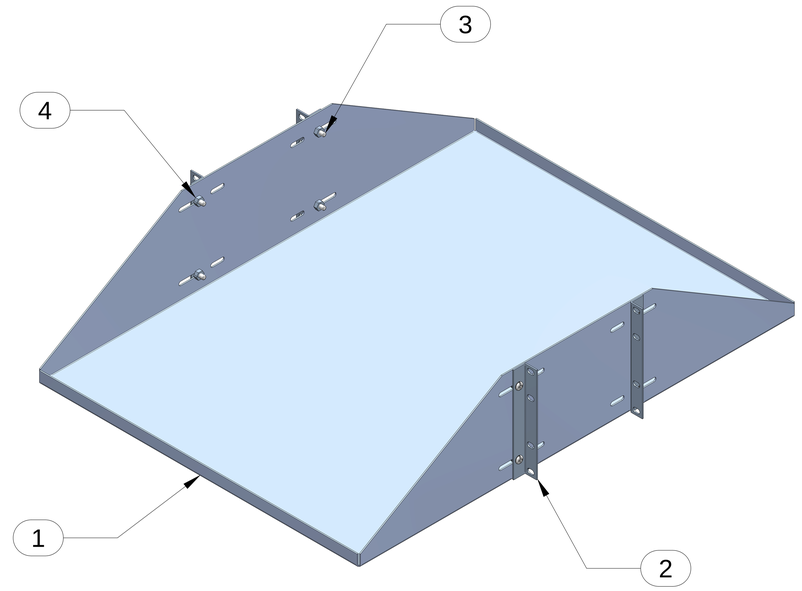


ISOMETRIC

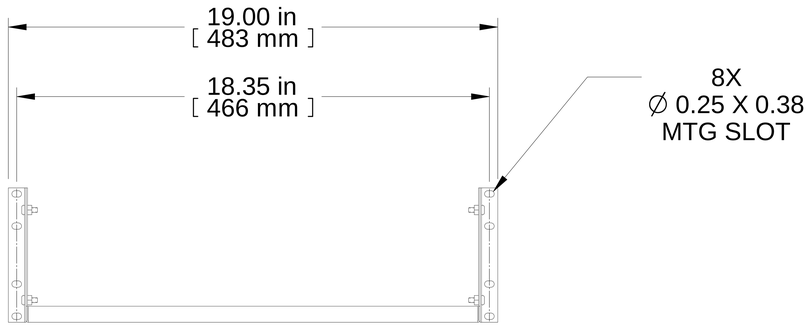


FRONT VIEW

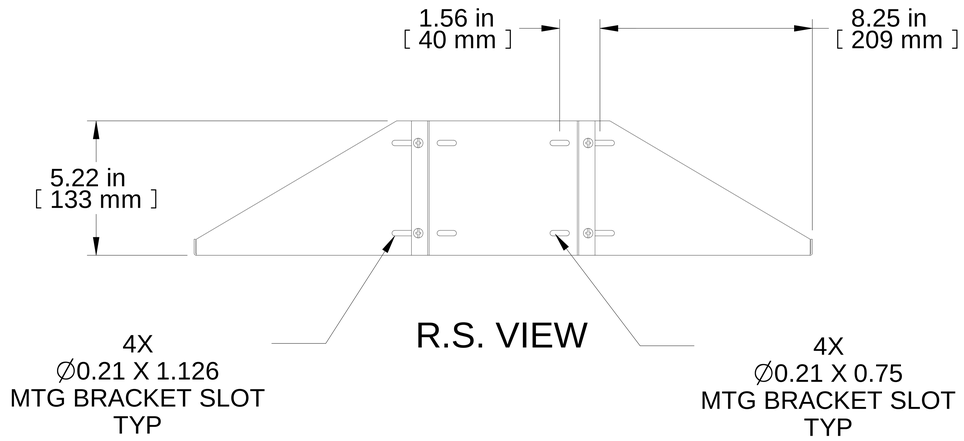


R.S. VIEW

| Item Number | Title | Quantity |
|---|---|---|
| 1 | DNRM - SHELF | 1 |
| 2 | DNRM - MTG BRACKET | 4 |
| 3 | SCREW 10-32 X 1/2 | 8 |
| 4 | 10-32 KEP NUT | 8 |

**PART NUMBERS**

| | |
|---|---|
| DNRMU1924BK1 | PAINTED BLACK TEXTURED |

**NOTES**

Maximum Weight Load Capacity: 275 lb
Mounting Hardware Included for 10-32 & 12-24 Rails
See Hammond Website for More Information

**Français**

Pour tous les détails sur nos produits,
svp veuillez consulter notre site www.hammondmfg.com

Data subject to change without notice. Isometric drawing not to scale.
Les données sont sujettes à changement sans préavis.

HAMMOND MANUFACTURING®

www.hammondmfg.com

**PART NO.** **DNRMU1924**