FCA304818T-00006

FIBERGLASS / PCX POLYMER CONCRETE ASSEMBLY

30" x 48" x 18"
(For actual dimensions see drawing)

Fiberglass / Polymer Concrete Assembly, Tapered Sides, No Floor, WUC 3.6, ANSI/SCTE 77-"T15/20K," 3/8" Hex Bolts, Standard Nameplate (Specify at time of order) Installed

LOAD RATINGS

Incidental Traffic - Parking Lot, Sidewalk
Conforms to:
- ÅWUC 3.6
- ÅASTM C 857
- ÅANSI/SCTE 77

FEATURES:

- ÅUSDA/RUS Approved
- ÅDrop-In nameplate
- ÅShipped assembled
- ÅSkid resistant cover
- ÅStainless steel bolts
- ÅCast-in floating nut box
  - Integral drain holes

Additional product information continued on the reverse

newbasis
Composites for Infrastructure

2626 Kansas Avenue
Riverside, California 92507

951.787.0600

951.787.0632 (fax)

info@newbasis.com

newbasis.com

PCX POLYMER CONCRETE
The Next Generation

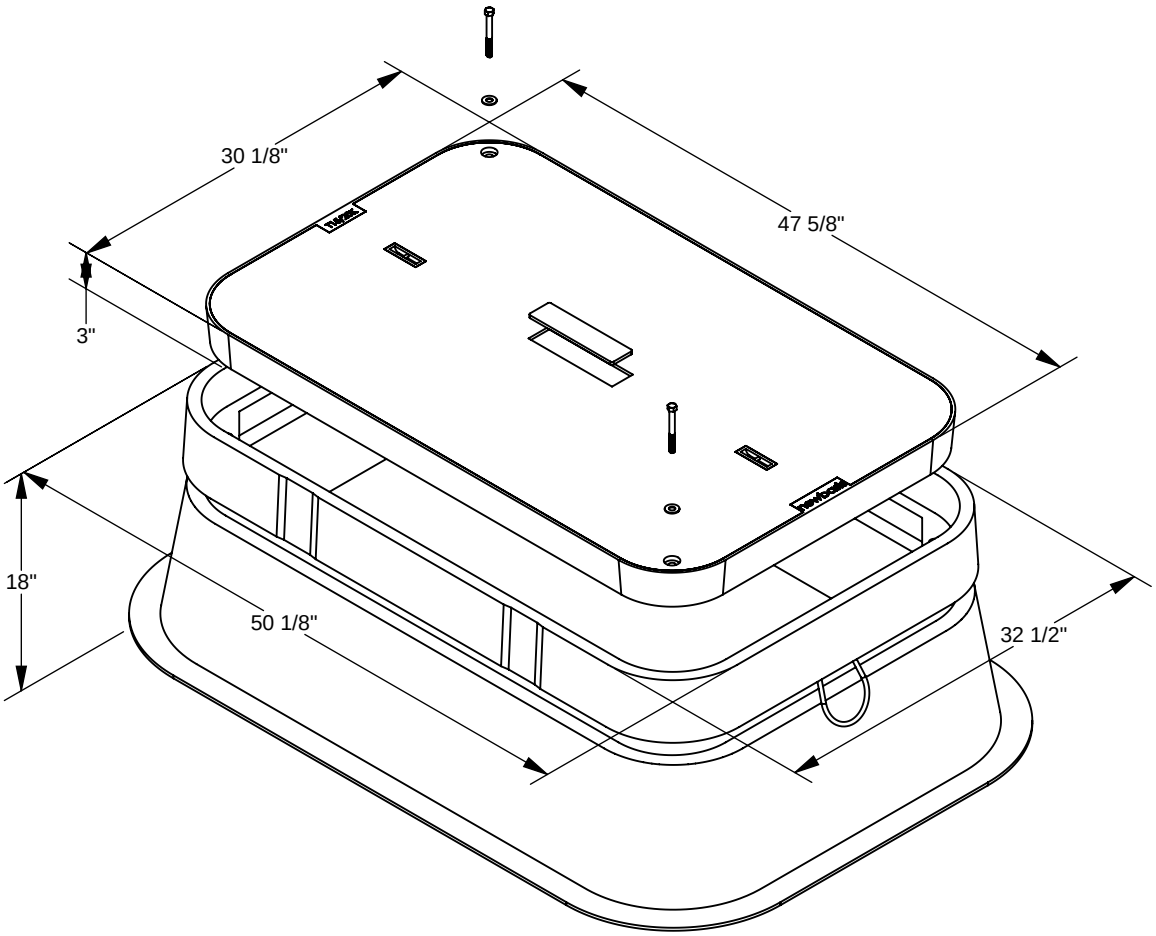

Inside Dimensions		
Length	Width	Depth
45 5/8"	28"	15"
53 5/8"	35 7/8"	

Rev: C.0

FCA304818T-00006

FIBERGLASS / PCX
POLYMER CONCRETE ASSEMBLY

Fiberglass / Polymer Concrete Assembly, Tapered Sides, No Floor, WUC 3.6, ANSI/SCTE 77-"T15/20K," 3/8" Hex Bolts, Standard Nameplate (Specify at time of order) Installed

30" x 48" x 18" **For actual dimensions, see drawing on front side.**

AVAILABLE OPTIONS

Penta Bolts
1/2" Penta Coil
Telephone EMS
Power EMS
Knockouts
2 Piece Cover
Custom Nameplate Installed
Custom Nameplate Shipped Separately
Standard Nameplate Installed
Standard Nameplate Shipped Separately

- Indicates a selected option

NAMEPLATES

One standard nameplate included with each assembly, installed at the factory or easily installed in the field. Custom nameplates are available. Contact customer service.

Standard Nameplates

ÅElectric
ÅTelephone
ÅFiber Optic
ÅStreet Lighting
ÅTraffic
ÅCATV
ÅCommunications

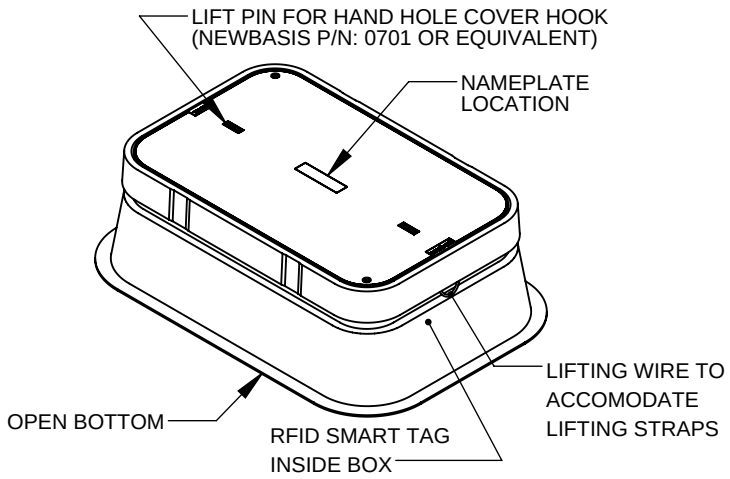

MATERIAL PROPERTIES AND ATTRIBUTES

Compressive Strength
Polymer Concrete - **11,500 PSI**
FRP - **19,440 PSI**
Per ASTM D695

Flexural Strength
Polymer Concrete - **4,000 PSI**
FRP - **16,830 PSI**
Per ASTM D790

Coefficient of Friction (Dry)
1.085
Per ASTM C1028

Polymer Concrete
- Advanced composite: Very high strength to weight ratio
- Non-metallic
- Non-conductive
- UV Resistant
- High impact resistant
- Impervious to chemicals and moisture

Materials tested in accordance with ASTM D-543 and ASTM D-570

WEIGHTS AND SHIPPING

COVER WEIGHT: 219 lbs.

BOX WEIGHT: 132.1 lbs.

ASSEMBLY WEIGHT: 351.1 lbs.

LOADED PALLET WEIGHT: 1806 lbs.

Standard shipping includes van delivery of pallet quantities to the lower 48 states. Partial pallet quantities and flat bed shipping available at an additional cost.

PACKAGING (Steel Banding, Edge Protection)

PALLET QUANTITY: 5

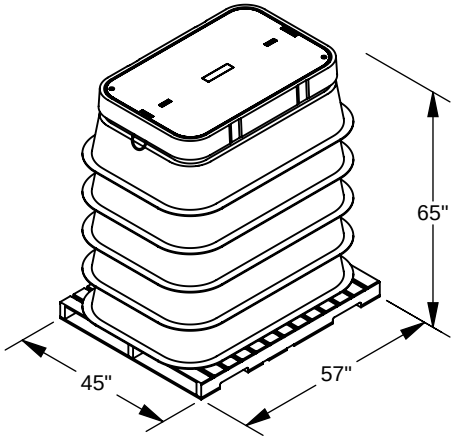

Rev: C.0